riverside®
dream. live. connect.

Home Office
Allegro
44726

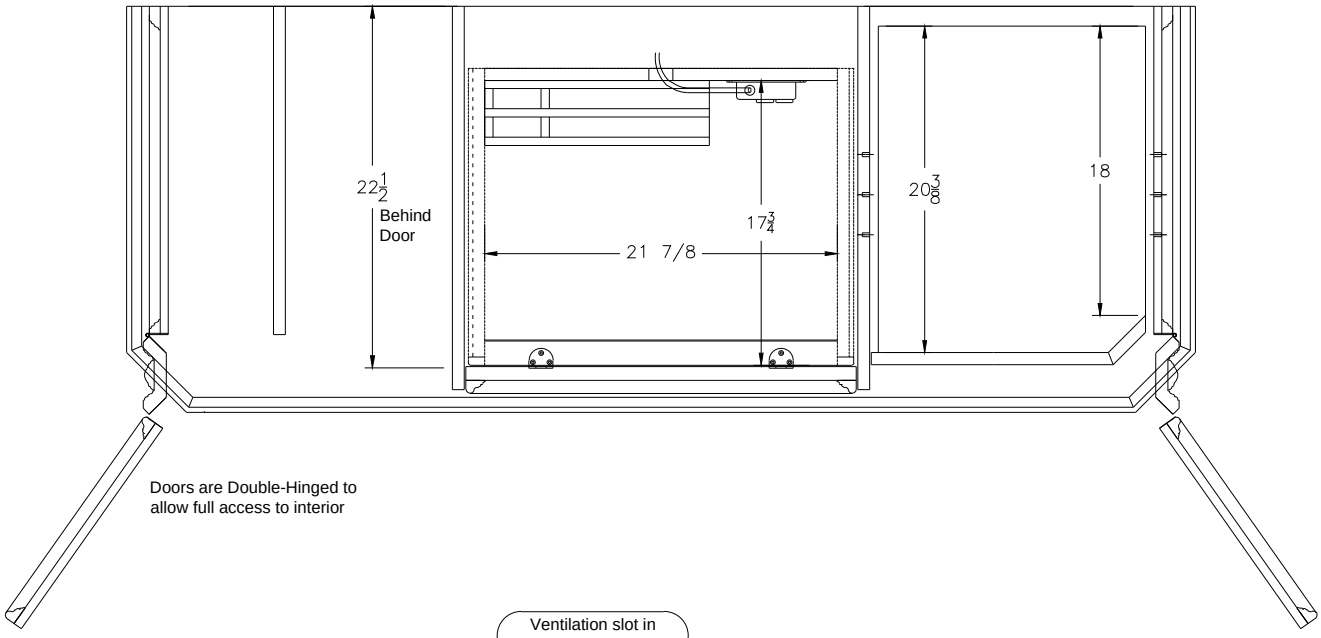

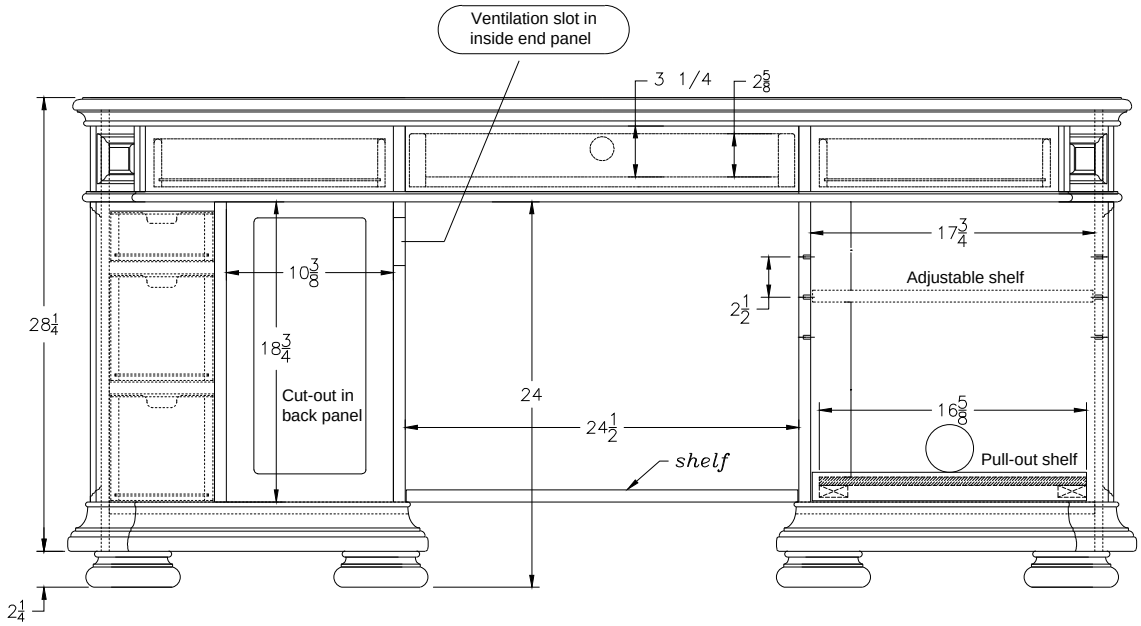

published 06-10-2014