Riverside
FURNITURE

email: info@riverside-furniture.com

Kali
Occasional Tables
Assembly Instructions

Made in Viet Nam

Be sure to check all packing material carefully for small parts, which may have come loose inside the carton during shipment. Separate, count and check all parts against the Components and Hardware List below.

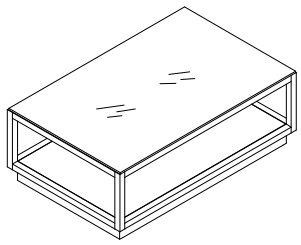

Item #38602
COCKTAIL TABLE

Component And Hardware List

Glass	Metal Frame	Metal Bar	Base Frame	Casters
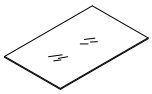	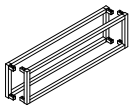		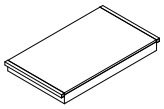	
(A) 1 PC.	**(B)** 2 PCS.	**(C)** 2 PCS.	**(D)** 1 PC.	**(E)** 4 PCS.

Bolts: Ø1/4-20 x 15mm	Flat Washer Ø 1/4"	Spring Washer Ø 1/4"	4mm Allen Key	Open Wrench	Plastic Disc
(F) 16 PCS.	**(G)** 16 PCS.	**(H)** 16 PCS.	**(M)** 1 PC.	**(N)** 1 PC.	**(T)** 6 PCS.

STEP 1:

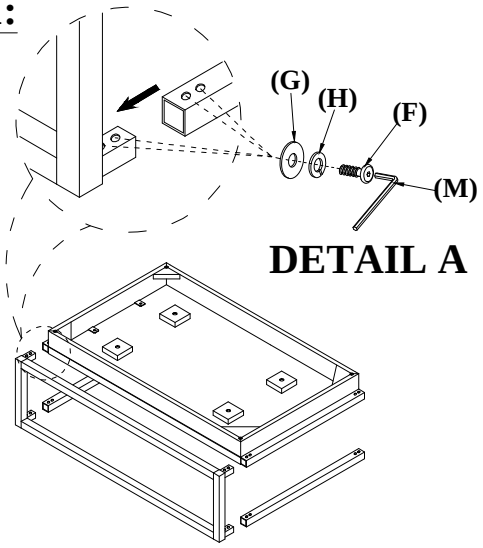

ASSEMBLY PROCEDURE:

1. Place the Base Frame (D) upside down on a soft and smooth surface.
2. Assemble the Base Frame and Metal Bars (C) to the Metal Frame (B) by using Bolts (F), Spring Washers (H), and Flat Washers (G) as shown in **DETAIL A.**

STEP 2:

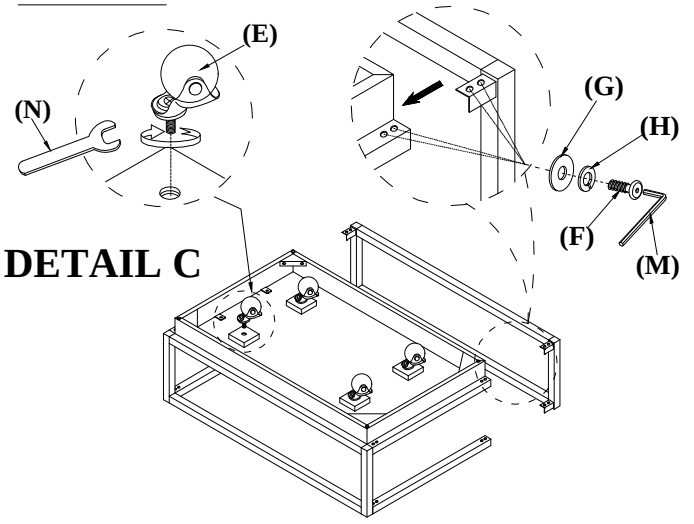

3. Assemble the second Metal Frame by using the same Washers and Bolts as previous Step. Tighten all Bolts using the Allen Wrench (M).
4. If the Casters (E) will be used, assemble to the bottom of the Base Frame. Tighten with the Wrench (N), as shown in **DETAIL C**.

Note: Casters are provided for convenient mobility. To prevent damage, never roll casters on unprotected hardwood or vinyl flooring.

STEP 3:

5. Turn the Assembled table upright.
6. Attach the Plastic Discs (T) on the top as shown.
7. Carefully place the Glass (A) on the Table top as shown in **DETAIL D.**

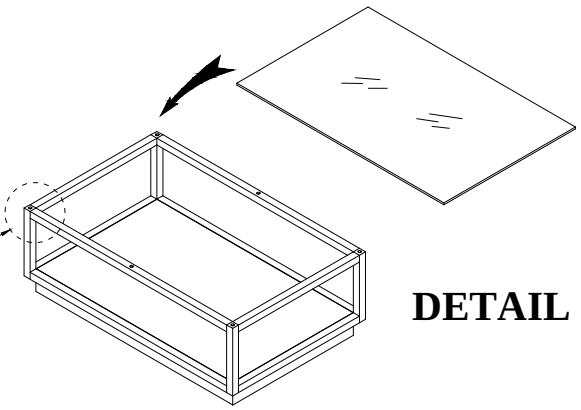

THANK YOU FOR YOUR PURCHASE.