Riverside
FURNITURE

email: info@riverside-furniture.com

Huntleigh #10287
King Sleigh Uph. Headboard
Assembly Instructions

Made in Viet Nam

Hardware and Parts packed with the Headboard

Headboard Panel	Headboard Post	Headboard Stretcher
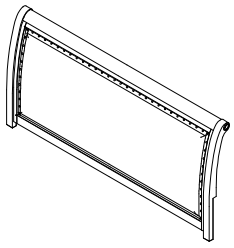	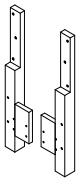	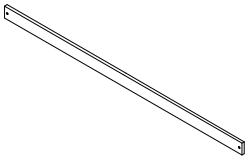
(H-A) 1 pc.	(H-B) One Left & One Right	(H-C) 1 pc.

Ø5/16"-18 x 1-1/2" Allen Head Bolt	Ø5/16" x Ø14mm Spring Washer	Ø5/16" x Ø18mm Flat Washer	⬡4mm Allen Wrench
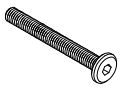			
(H-D) 8 pcs.	(H-E) 8 pcs.	(H-F) 8 pcs.	(H-G) 1 pc.

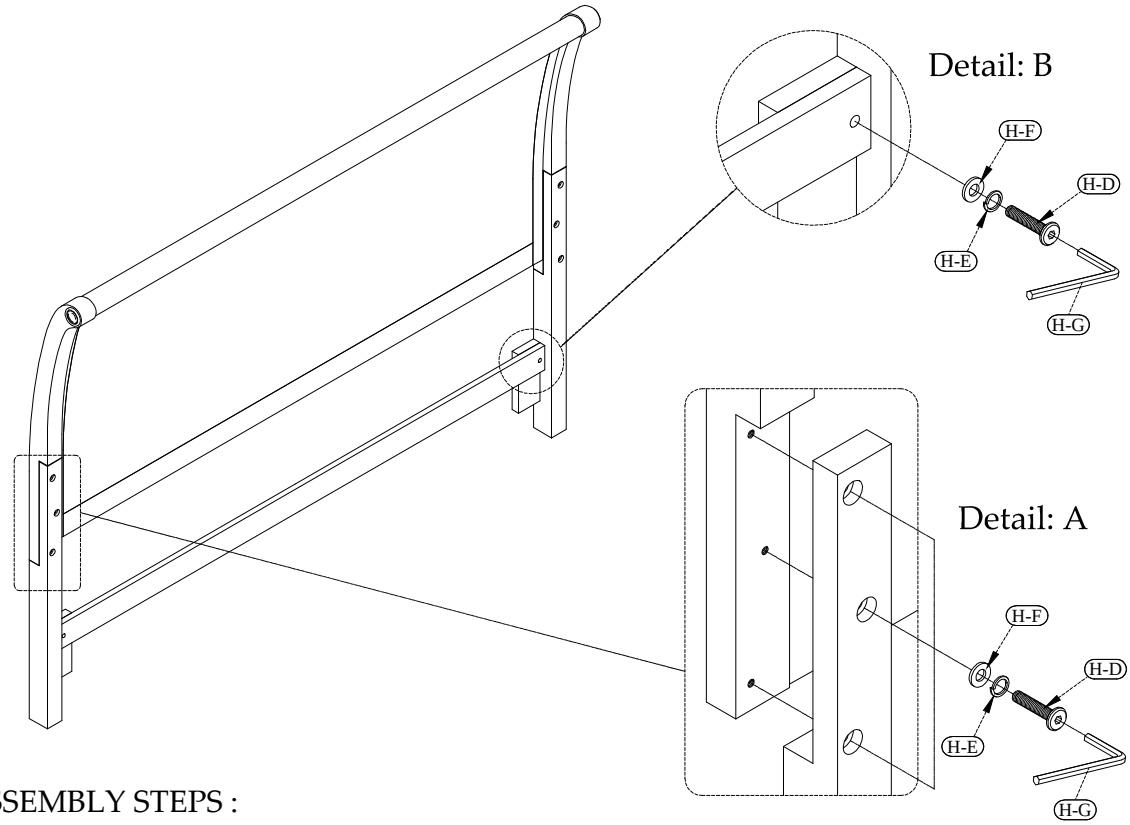

ASSEMBLY STEPS :

1. Place the Headboard Panel (H-A) face down on a clean and soft surface.
2. Attach the Left and Right Headboard Posts (H-B) to the back of the Headboard Panel, using the Flat Washers (H-F), Spring Washers (H-E) and the Ø5/16" x 1-1/2" Bolts (H-D). Do not fully tighten until after next step. (see Detail A).
3. Attach the Headboard Stretcher (H-C) to the Headboard Posts using the same Washers and the Ø5/16" x 1-1/2" Bolts (H-D).
4. Tighten all Bolts using the Allen Wrench (H-G). (see Detail A & B).

5. Gently lean the back of the assembled Headboard against the wall where the Bed will be located in the room.

Riverside
FURNITURE

email: info@riverside-furniture.com

Huntleigh # 10287
King Sleigh Uph. Headboard
Assembly Instructions

Made in Viet Nam

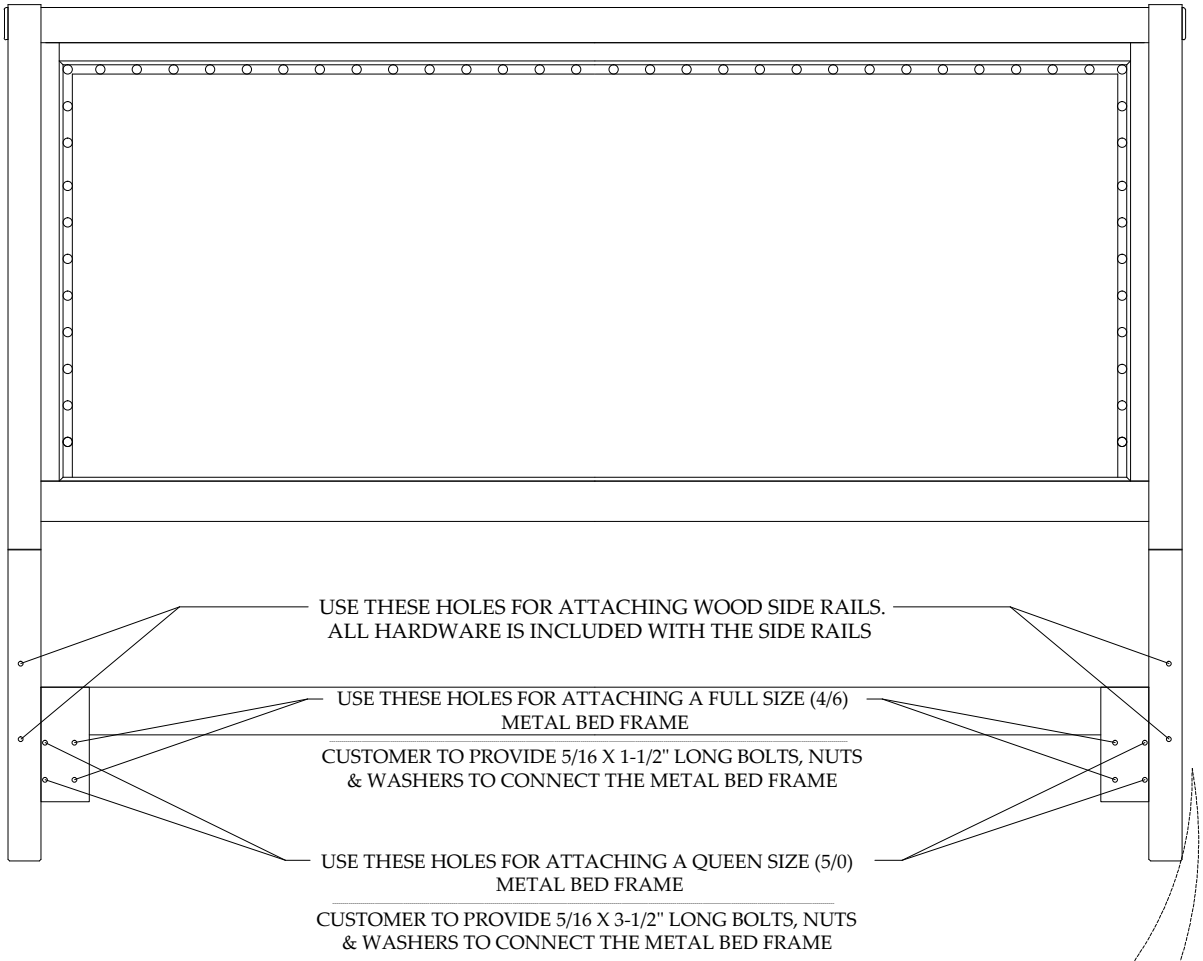

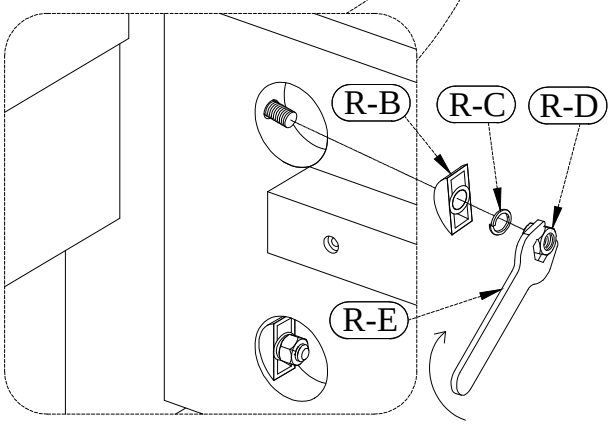

6/0 6/6 King Standard Bed
10287 -- 6/0-6/6 Sleigh Headboard
10289 -- 6/0-6/6 Sleigh Storage Footboard w/Slats
10274 -- 5/0-6/6 Sleigh Bed Rails
OR
10284 -- 6/0 Sleigh Bed Rails

The Headboard may be used alone with an Eastern King or California King Size Metal Bed Frame