Riverside FURNITURE

email: info@riverside-furniture.com

Belmeade Bedroom Assembly Instructions

Made in Viet Nam

Hardware and Parts packed with the Headboard

Headboard Sleigh H-A 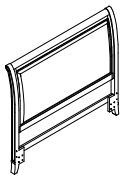 1 pc.	

Hardware and Parts packed with the Footboard

Footboard Sleigh F-A 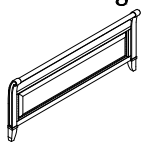 1 pc.	Wood Slat 60 7/8 long F-B 4 pcs.	Support Leg 6 1/4 long F-C 4 pcs.	ϕ8 x 1" Wood Screw F-D 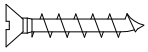 8 pcs.

Hardware and Parts packed with the Bed Rails

Bed Rail 5/0-6/6 R-A 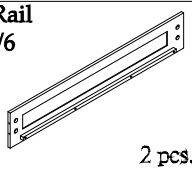 2 pcs.				
ϕ5/16" x 3-1/2" All-thread Bolt R-B 8 pcs.	ϕ5/16" Washer R-C 8 pcs.	ϕ5/16" Spring Washer R-D 8 pcs.	ϕ5/16" Hex Nut R-E 8 pcs.	13mm Open Wrench R-F 1 pc.

5/0 Queen Sleigh Bed

15874 -- 4/6-5/0 Sleigh Headboard

15875 -- 5/0 Sleigh Footboard & Slats.

15876 -- 5/0-6/6 Sleigh Bed Rails (for 5/0 Bed)

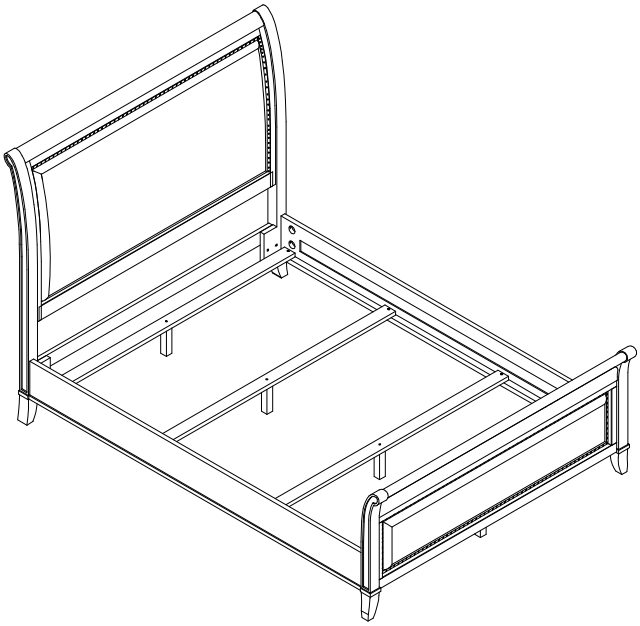

Riverside FURNITURE

email: info@riverside-furniture.com

Belmeade Bedroom Assembly Instructions

Made in Viet Nam

ASSEMBLY STEPS :

1. Place the Headboard Panel (H) face down on a clean and soft surface.

2. Install the eight All-Thread Bolts (R-B) into the threaded metal inserts mounted on the Headboard and Footboard posts.

3. Gently lean the Headboard against the wall where the completed Bed will be located in the room.

4. Position one end of one Bed Rail (R-A) onto the All-Thread Bolts and fasten with the Washers (R-C & R-D) and Hex Nuts (R-E). Only partially tighten the Hex Nuts until the Footboard has been connected. Repeat for other Bed Rail.

5. Position and connect the Footboard to the other end of the Bed Rails as in previous Step.

6. Carefully align the Footboard to be 'square' with the Headboard. Using the Open Wrench (R-F) tighten all Hex Nuts attaching the Side Rails to the Headboard and Footboard. (See Detail A)

7. Attach the Support Leg (F-C) to the Wood Slat (F-B). (See Detail: B)

8. Attach the Wood Slats to the Bed Rails using the Wood Screws (F-D) and your Phillips Screwdriver. The levelers located at the bottom of the Support Legs can be adjusted if necessary. (See Detail C)

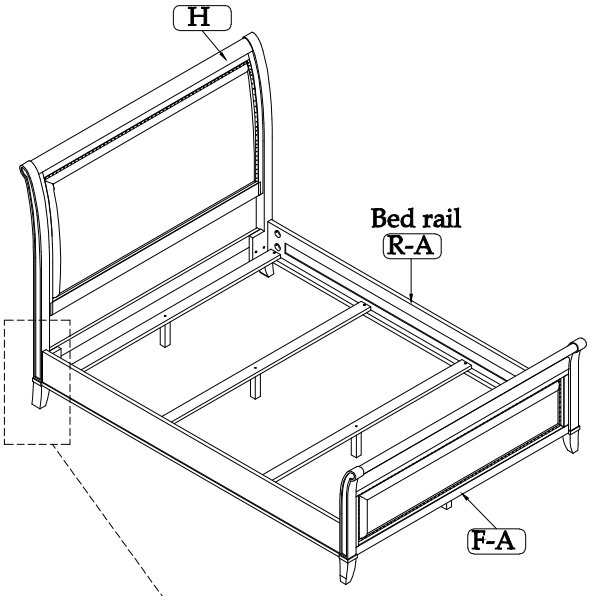

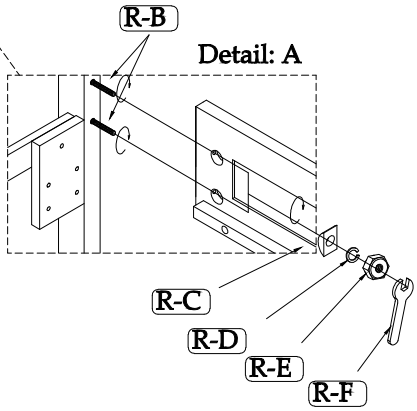

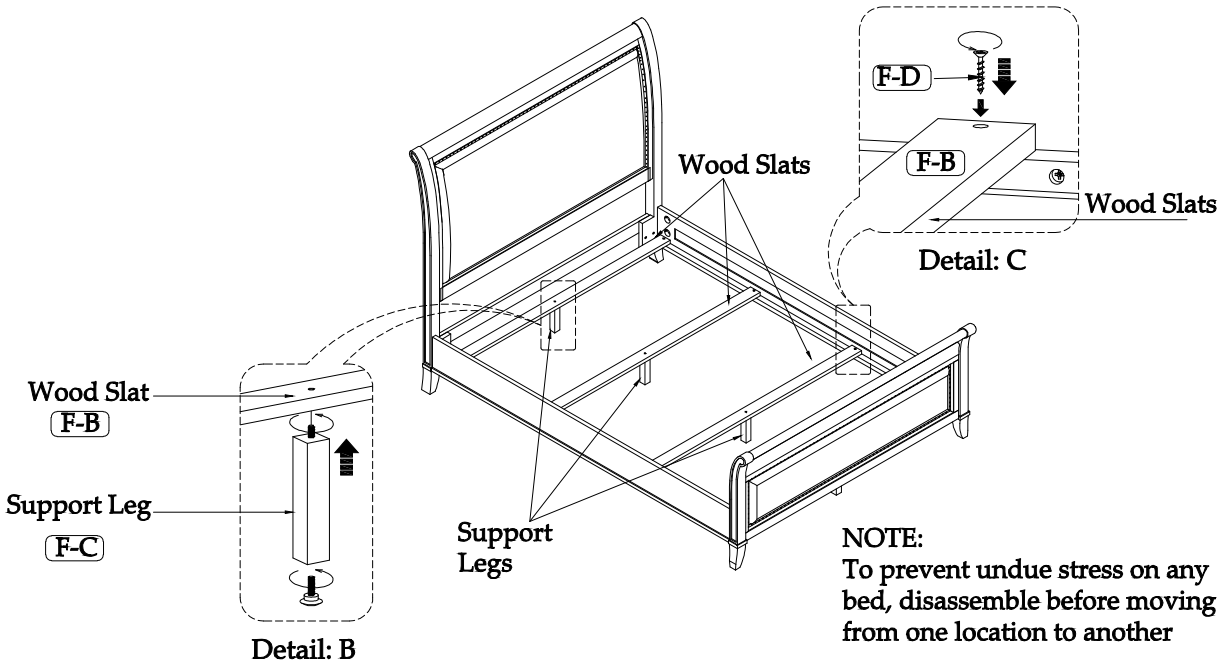

NOTE:
To prevent undue stress on any bed, disassemble before moving from one location to another

Riverside

email: info@riverside-furniture.com

Belmeade
15874
Queen Sleigh *Bed Headboard*
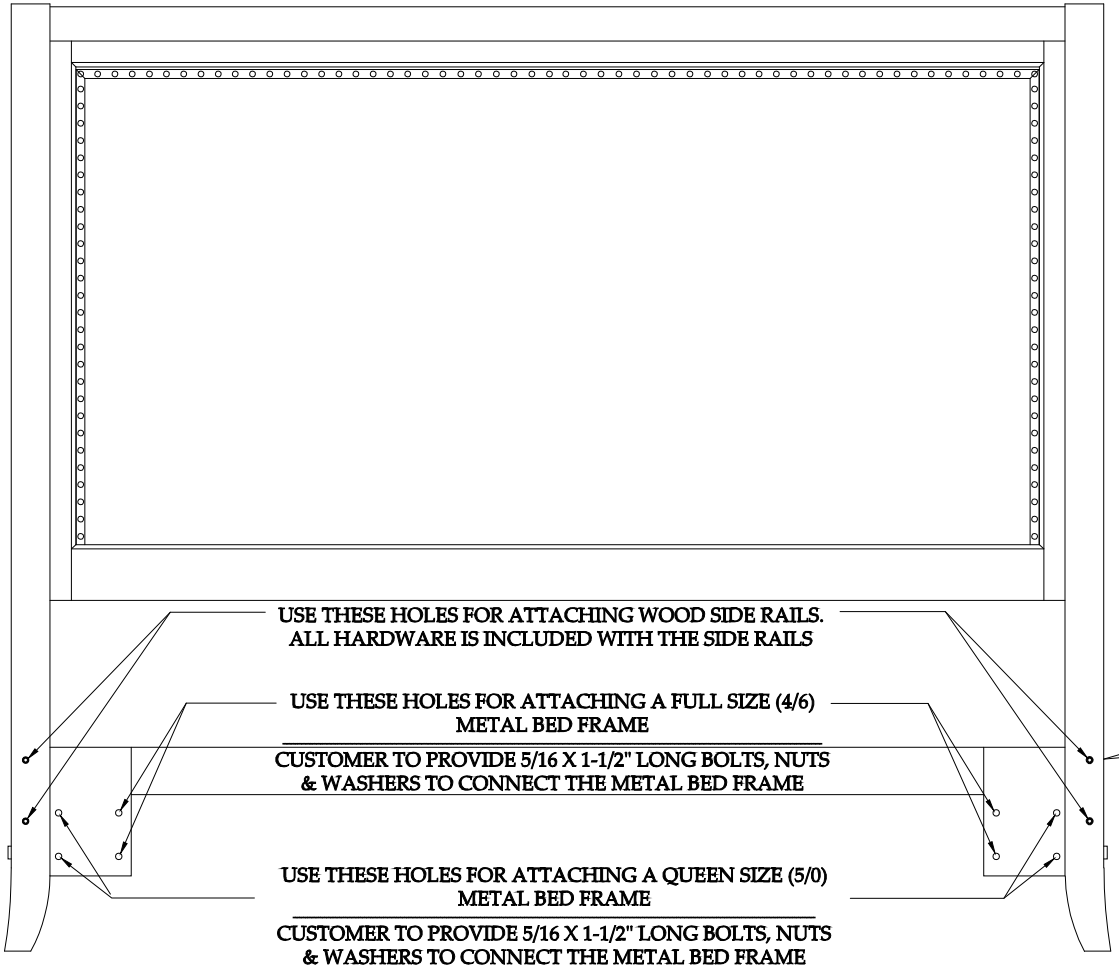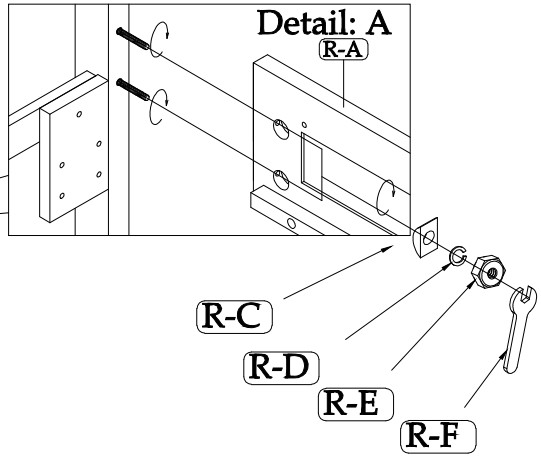
5/0 Queen Sleigh Bed
15874 -- 4/6-5/0 Sleigh Headboard
15875 -- 5/0 Sleigh Footboard & Slats.
15876 -- 5/0-6/6 Sleigh Bed Rails